THIS DRAWING IS UNPUBLISHED. RELEASED FOR PUBLICATION 20
© 2016 COMMSCOPE, INC. CONFIDENTIAL
NOTICE: THESE DRAWINGS AND SPECIFICATIONS ARE THE PROPRIATARY PROPERTY OF COMMSCOPE, INC. AND MAY BE USED ONLY FOR THE SPECIFIC PURPOSE AUTHORIZED IN WRITING BY COMMSCOPE, INC.

REVISIONS

P	LTR	DESCRIPTION	DATE	DWN	APVD
	C	ECO-13-019955	26DEC2013	JM	RA
	D	REV; 40032662MCO	08AUG2016	GG	LS

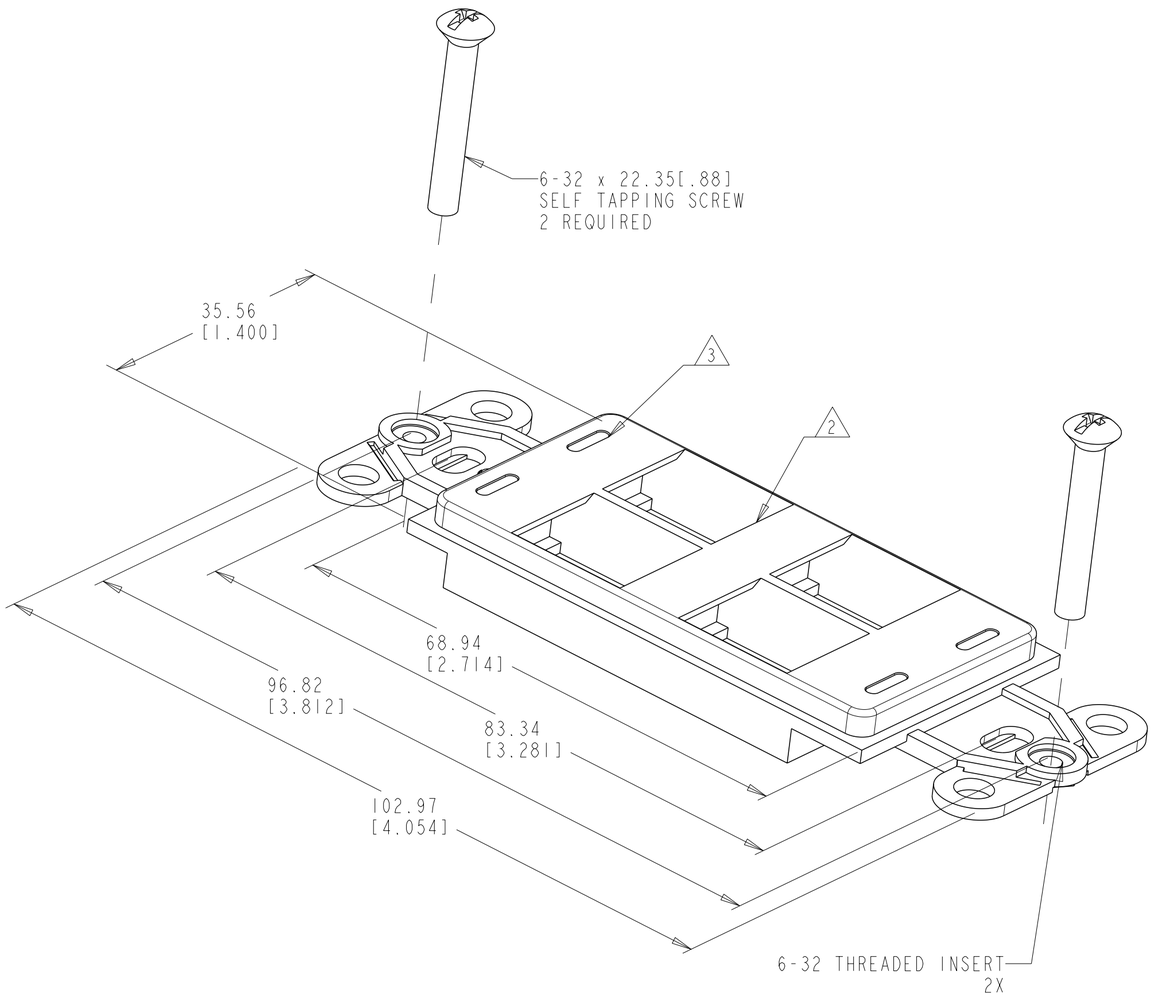

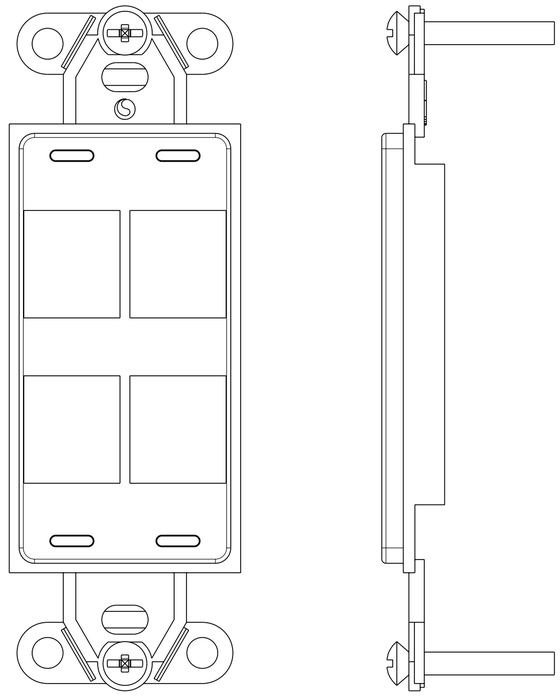

1. KIT SHIPPED WITH SCREWS NOT ASSEMBLED.

2. OPENINGS WILL ACCEPT 110 CONNECT JACKS, SL SERIES JACKS, MT-RJ OUTLET JACKS AND 110 CONNECT OR SL SERIES MULTIMEDIA INSERTS.

3. SLOTS WILL ACCEPT COLOR CODED ICONS.

4. DIMENSIONS ARE NOMINAL UNLESS OTHERWISE SPECIFIED.

5. MATERIAL: STRAP
ABS MOLDING COMPOUND. SEE TABLE FOR COLOR.
SCREWS - ZINC PLATED CARBON STEEL.
THREADED INSERT - STAINLESS STEEL.

COLOR	PART NO.
ALPINE WHITE	1-1479504-3
ELECTRIC IVORY	1-1479504-1
NEMA GRAY	1479504-4
WHITE	1479504-3
BLACK	1479504-2
LT. ALMOND	1479504-1

THIS DRAWING IS A CONTROLLED DOCUMENT.

DIMENSIONS: MM [INCHES]

TOLERANCES UNLESS OTHERWISE SPECIFIED:
0 PLC ±-
1 PLC ±-
2 PLC ±-
3 PLC ±-
4 PLC ±-
ANGLES ±-

MATERIAL 5 -
FINISH - -

DWN L. HALL 20JUN03
CHK G. BOWMAN 20JUN03
APVD G. BOWMAN 20JUN03
PRODUCT SPEC -
APPLICATION SPEC -
WEIGHT -

COMMSCOPE, INC.

NAME KIT, MOUNTING STRAP, DECORATOR, 4 PORT
-

SIZE A2 | CAGE CODE - | DRAWING NO C-1479504 | RESTRICTED TO -

CUSTOMER DRAWING | SCALE 2:1 | SHEET 1 OF 1 | REV D

1471